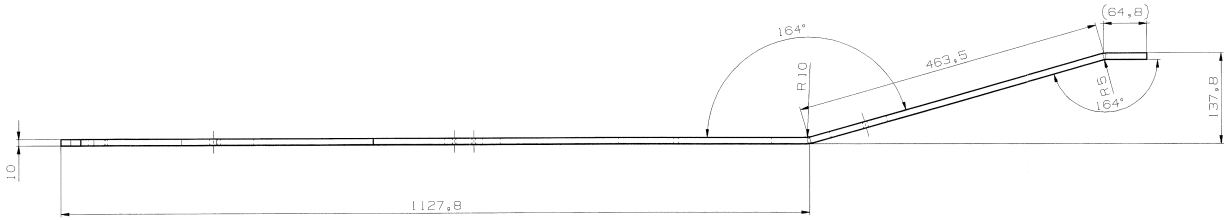

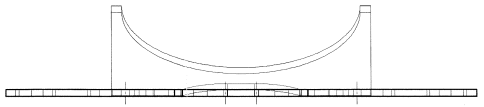

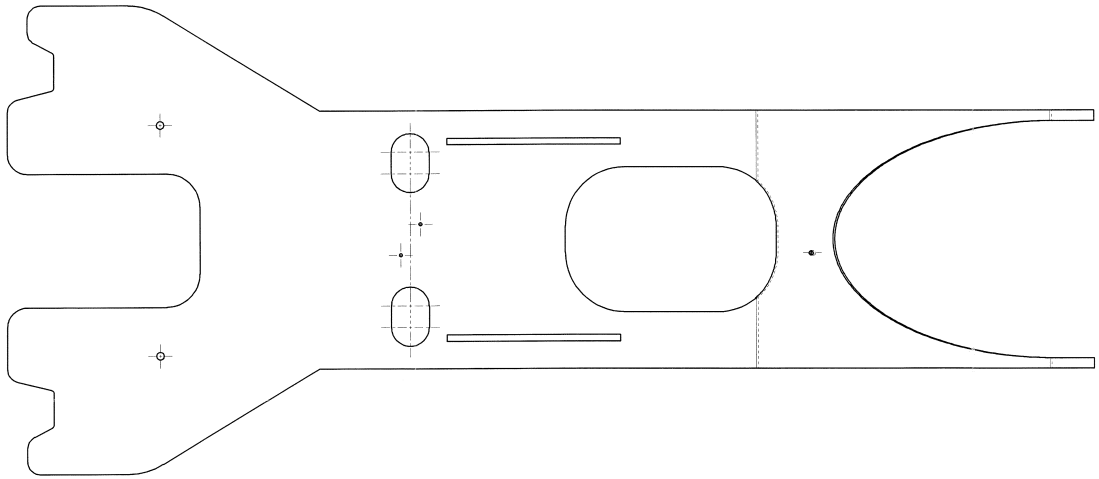

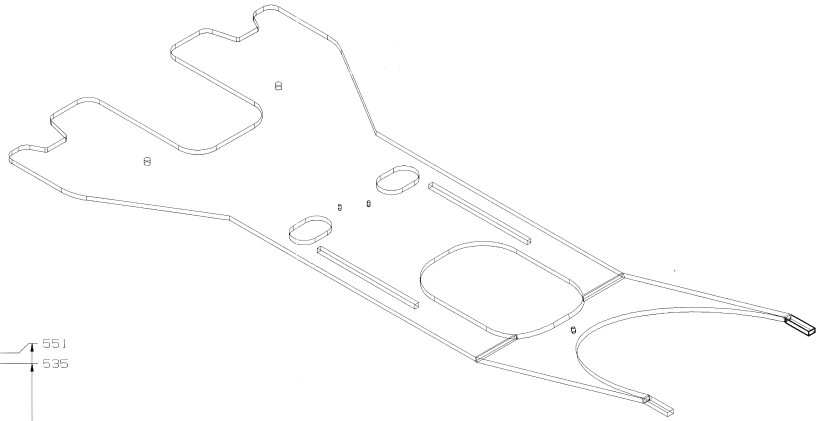

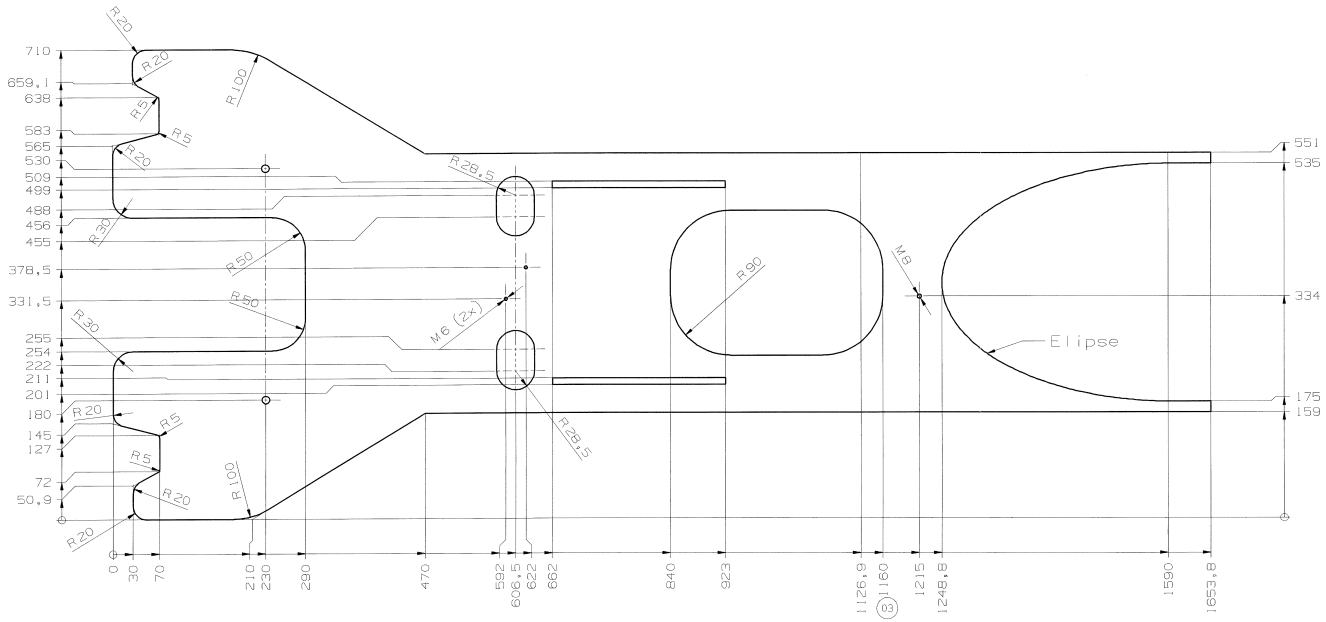

PŘEKLAD

dne: 11. 10. 2012

PROVEDLA

HOCHMAN

05 -11- 2012

ARCHIV

3

NZ 72/00786

Screw threads tolerances ISO 965 - 2 6g/6H					APPROVED FOR			Serienfrei (F4)
General tolerances for oxyacetylene cutting DIN EN ISO 9013 - II II					Welding Construction according to "Werknorm 43" Surface Quality according to "Werknorm 40" Theor. Weight according to "KR001-2003" Material according to "Werknorm 51"			
General tolerances for laser cutting DIN 2310 - 5 -IL up to 3mm / -K over 3mm	Projection see ISO 128		Surface Quality	10	AUSSPARRUNG KONTUR GEÄNDERT RECESS CONTOUR CHANGED	KRAU_BASARER	09.10.2012	K15941
	Scale	Originale-Size	Standard Color					
General tolerances for nibbling / bending DIN 6930 - 2 - m	1:4	A1	Name	Date	Count / Change	Name	Date	OCM-Nr
	Bend Tolerance see DIN 6930 - 2 - m		KRAU_SCHMIDE	30.05.2005	Material BS10	Theor. Weight Ingl. 39,6		
	Welding Tolerance see DIN EN ISO 13920-BF							
	General Tolerance see DIN ISO 2768 - mk							
	Surface Condition see DIN ISO 1302							
	Laser-Cut Tolerance see DIN 2310-5-IL up to 3mm / -K over 3mm							
	Copyright reserved to ISO 16016							

Name Untergurt

Additional Text

Mat-Nr.

Doc-Nr 2000012506 Version 03